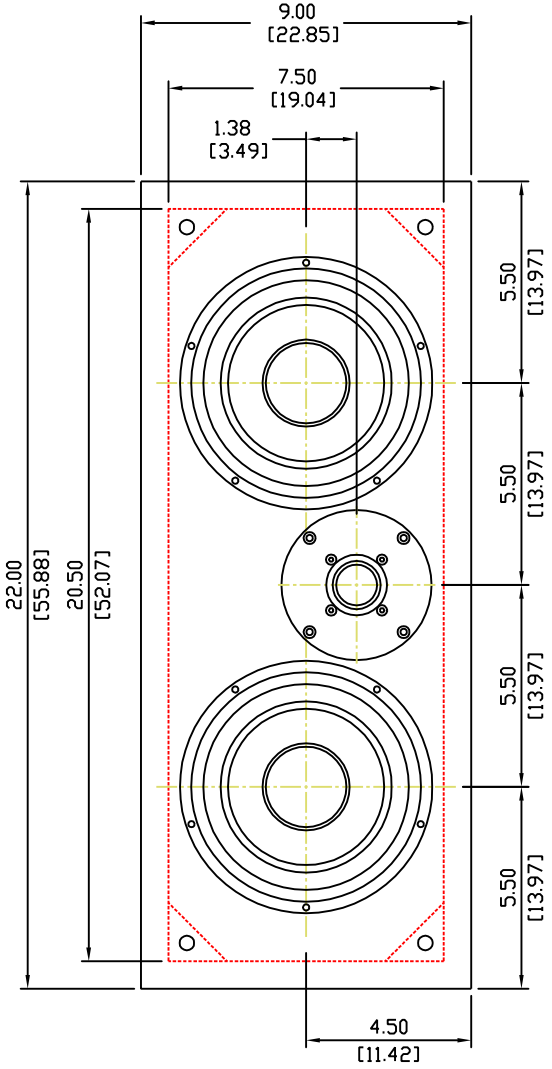


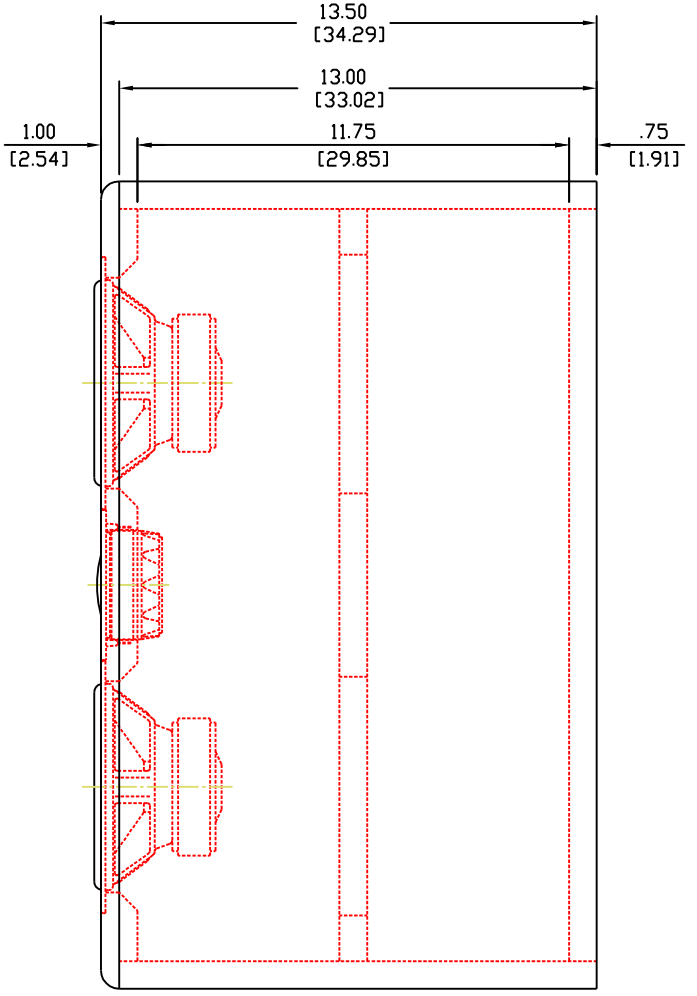


(2) Dayton DA175
(1) Seas 27TBFCG
1.00 Internal Volume, Sealed (PE box)
3/4" MDF Construction

Copyright 2006 John Krutke. All Rights Reserved. Do not use without expressed written permission.

ZAPH AUDIO